VFD120 MD Series

Variable Priority Flow Dividers with Remote Proportional Control

The VFD120MD remote control flow divider is ideally suited for the agricultural and industrial user seeking a cost-effective method of controlling hydraulic motor speed.

Variable priority flow dividers split a single input (P) flow into a priority (REG) flow and an excess or by-pass (BP) flow which can be returned directly to the oil reservoir or used to power a second system. This is possible due to the valve's adaptive pressure compensation characteristics meaning both the priority and by-pass flows can be used to drive separate circuits, even under varying loads. In many instances this dispenses with the need for another pump to operate a second system.

The VFD120 MD design has also been optimised to reduce energy wastage by minimising the pressure losses across the valve, resulting in a significant reduction in running costs.

Specifications

Maximum Rated Pressure:	Up to 420 bar, 6000 psi
Total Flow:	Up to 120 L/min, 32 US gpm
Maximum Priority (REG) Flow:	Up to 110 L/min, 30 US gpm
Porting:	BSPP, SAE, NPTF, METRIC
Material:	Steel components in cast Ductile Iron body painted black Drive Mechanism mounted on aluminium plate and mild steel bracket.
Weight:	2.75 kg, 4.4 lb
Mounting:	2 Bolts - M8 or 5/16"
Power Supply:	11 - 28 Vdc
External Electrical Protection:	2 Amp fuse
Peak Current:	1.5 A
Standby Current:	<100 mA

Symbol:

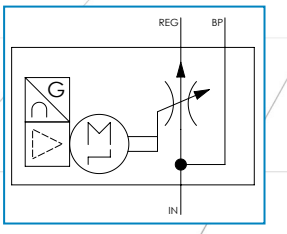

Make it BLUE®

Features

- Minimum to maximum priority flow in less than 10 seconds (at full pressure).
- No external control box needed. All Electronics are self-contained inside the canister.
- Easy setup on-field. All connections made via M12 connector. Set and Forget.
- Automatic current limiting to prevent overheating and motor overload.
- Valve settings immune to power failure.
- Pressure compensated permitting both 'Priority' and 'By-Pass' to be used simultaneously at varying pressures without affecting the 'Priority' flow rate.
- Designed to meet IP66 (with cable connected).

Sales Order Code

Please contact our technical sales team to discuss any special order requirements.

TYPICAL CODE	DESCRIPTION	SEE TABLE	YOUR CODE
VFD120MD	Basic Valve	-	VFD120MD
120	Priority (REG) Flow Capacity	Table 1	
J	Porting	Table 2	
P	Control	Table 3	

Table 1: Priority (REG) Flow Capacity*

CODE	FLOW SIZE	
	L/min	US GPM
050	0** - 19	0** - 5
080	0** - 30	0** - 8
120	0** - 45	0** - 12
160	0** - 60	0** - 16
200	0** - 76	0** - 20
250	0** - 95	0** - 25
300	0** - 110	0** - 30

Notes:
**Input flow will affect the maximum seen priority flow capacity. To achieve the given flow capacity, the input flow needs to be greater.*
***Minimum flow of 0 - 0.5 L/min, 0 - 0.1 US gpm.*

Table 2: Porting

CODE	PORT THREAD TYPE
H	1/2” BSPP ***
J	3/4” BSPP
G	1-1/16” -12UN # 12 SAE ORB
A	3/4” NPTF ****
M	M22 X 1.5 ***

Notes:
**** M22 and 1/2” BSPP threads only available in flow codes 050 to 120.*
***** All NPTF threads are to ANSI B1.20.3 -1976 Class 1. As stated in the standard it is recommended that “sealing is accomplished by the means of a sealant applied to the thread”. NPT fittings may also be used to connect to NPTF ports (also with a sealant applied to the thread).*

Table 3: Control

CODE	DESCRIPTION
P	Potentiometer
5V	0.5 - 5 Vdc
mA	4 - 20 mA

Priority (Reg) Flow vs. Load

All tests completed using ISO32 Mineral oil at 40 degrees C (32 cSt)

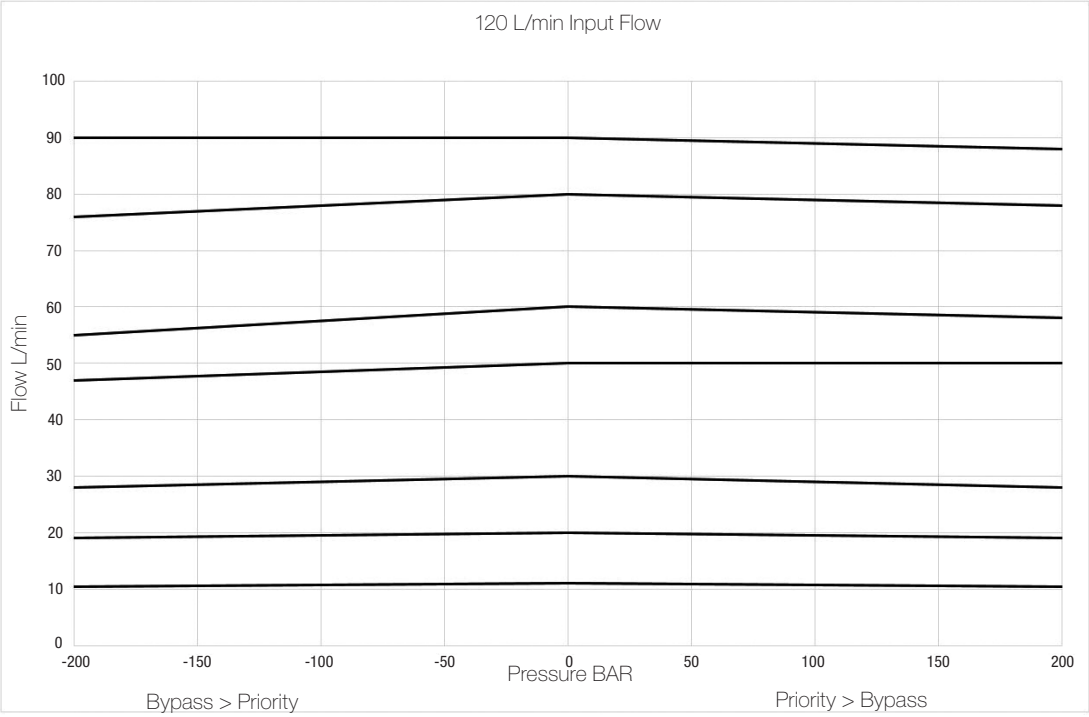

Max Pressure Drop Between Inlet (P) and priority (REG) port

All tests completed using ISO32 Mineral oil at 40 degrees C (32 cSt)
Inlet Flow - 120 L/min, REG port 100 Bar, BP port to tank

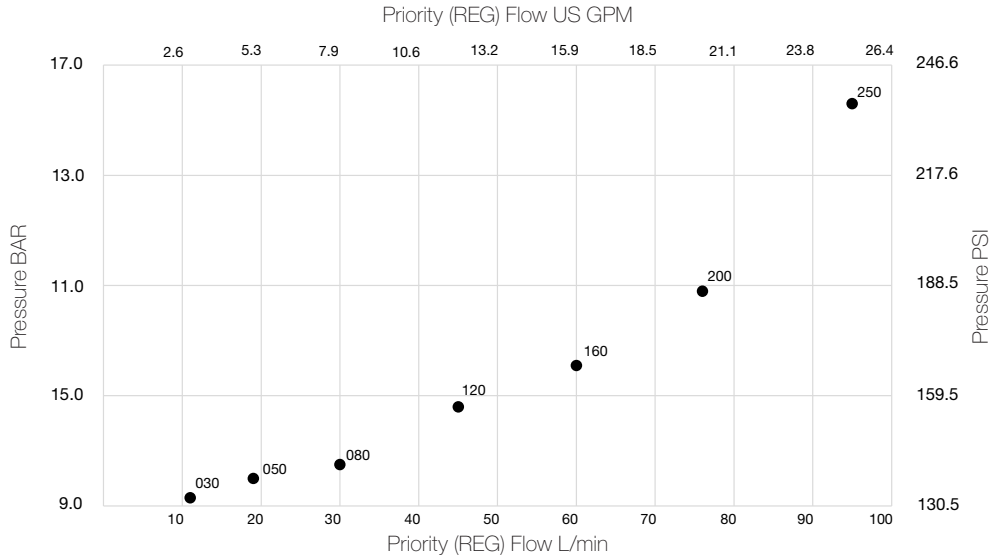

Installation Details Dimensions in mm [inches]

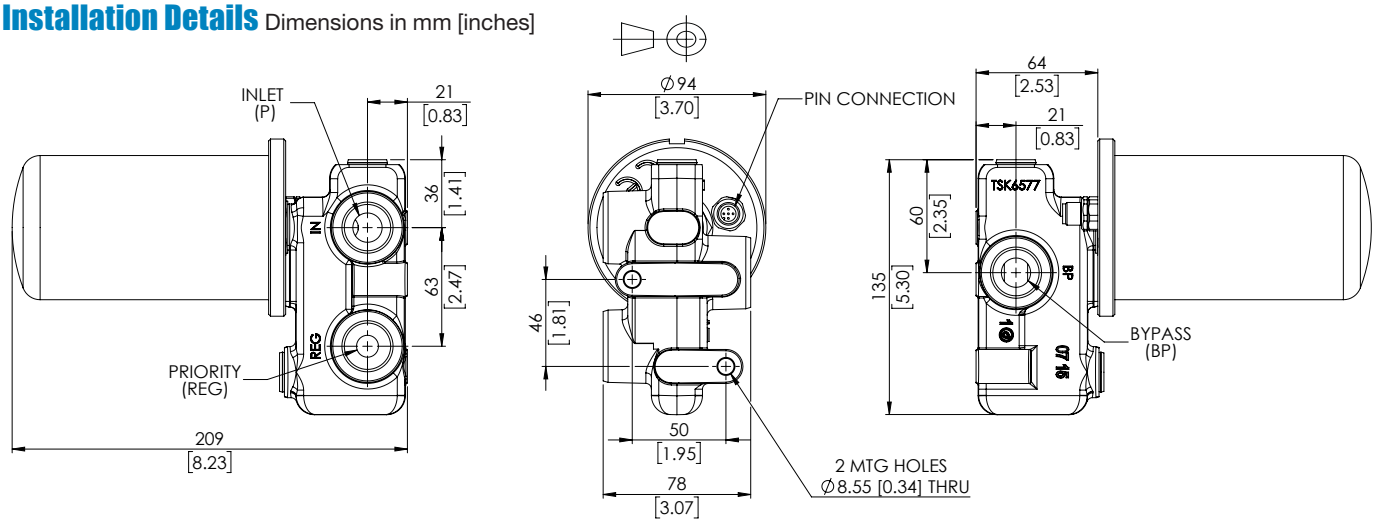

Connecting Details

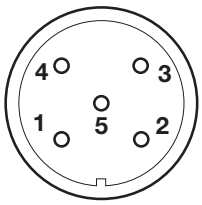

Potentiometer

PIN	ASSIGNMENT
1	+ In
2	Pot +
3	0 Vdc
4	Pot Wiper
5	Pot -

0.5 - 5 Vdc

PIN	ASSIGNMENT
1	+ In
2	N/C
3	0 Vdc
4	0.5 - 5 Vdc In
5	0.5 - 5 Vdc GND

4 - 20 mA

PIN	ASSIGNMENT
1	+ In
2	N/C
3	0 Vdc/4 - 20 mA -
4	N/C
5	4 - 20 mA +

N.B. N/C = Do not connect

Connecting cable (5m) with Pot	TSK6638-05
Connecting cable (5m) (4-20mA and 0.5-5 V versions)	TSK6635-05

Consult sales for other lengths

Webtec reserve the right to make improvements and changes to the specification without notice